2nd DIGITAL OCEAN CONVENTION

AUGUST 25–26, 2021 | HANSEMESSE ROSTOCK

Offshore Maintenance

Detlef Lemke
Henrich Preuß

funded by:

Bundesministerium für Bildung und Forschung

MV Mecklenburg-Vorpommern Ministerium für Bildung, Wissenschaft und Kultur

Fraunhofer SOT

Agenda

- Introduction SOT-Group
- Start-Project Offshore Maintenance
- SOT Range of Services

Fraunhofer SOT

Introduction SOT-Group

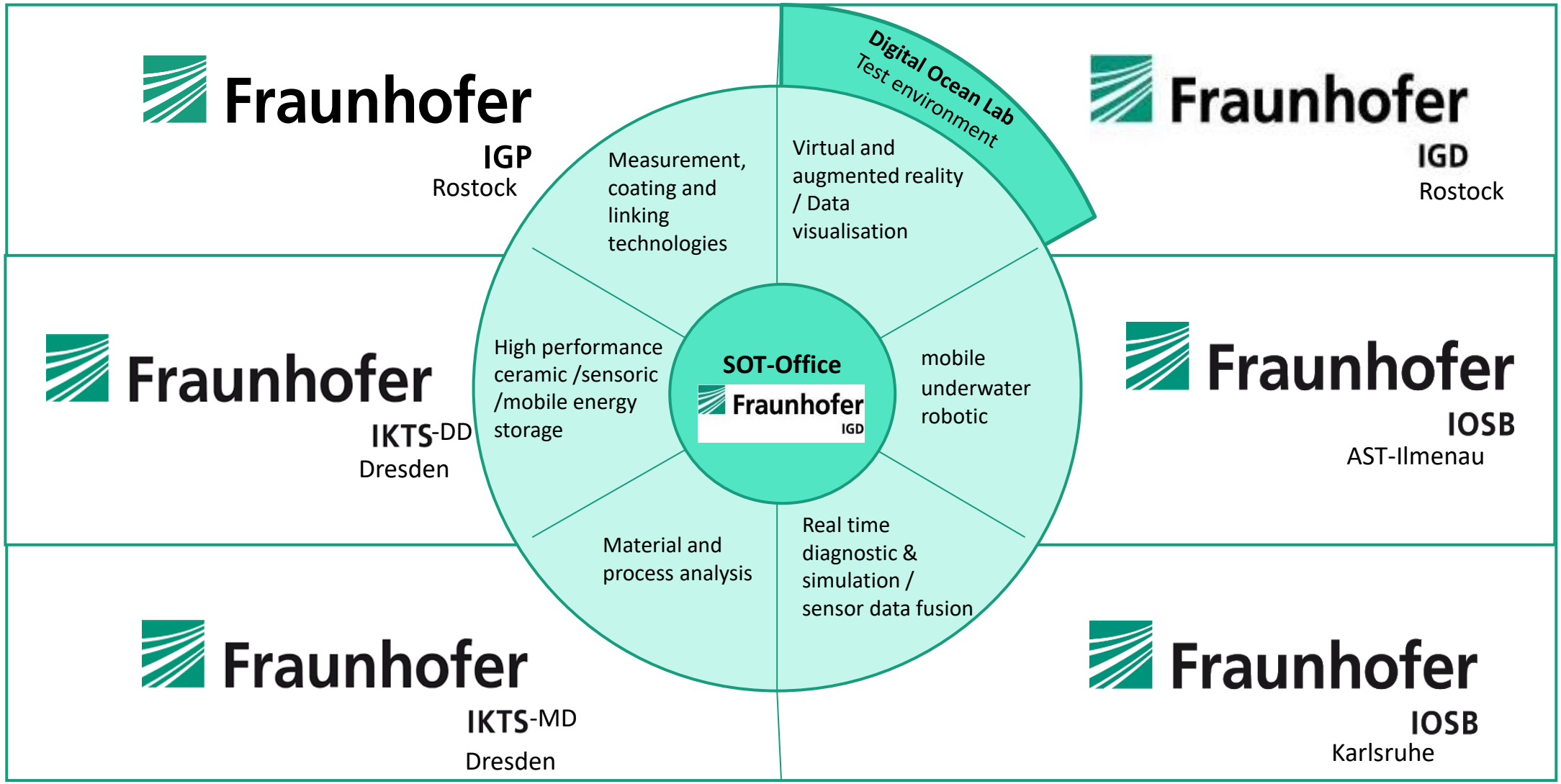

Introduction SOT-Group

Fraunhofer IGP Rostock

Underwater coating, welding or bonding of offshore structures

UW-Photogrammetry, 3D-Data Processing

Fraunhofer IGD Rostock

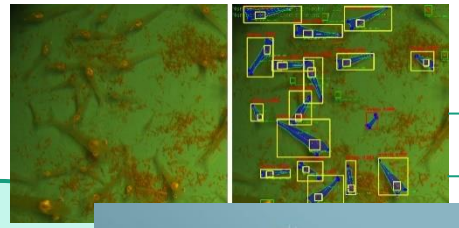

Computer Vision, Machine Learning

Particle ID, Sensor data visualization

Computer graphic/ Virtual Reality, Augmented Reality

SOT

Fraunhofer IKTS Dresden

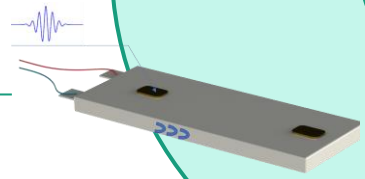

Battery-monitoring

Characterization of suspension and particles

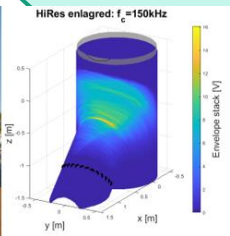

Material-/Process analysis

Mobile robotics, UW sensor data evaluation, sensor data fusion, real-time simulation

Fraunhofer IOSB Ilmenau Karlsruhe

ROV / AUV development, Search missions, port inspection

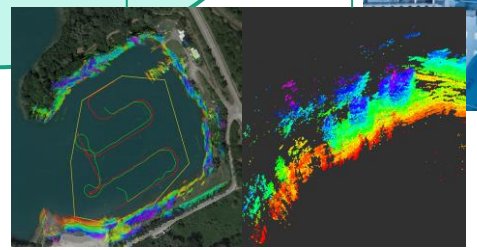

Fraunhofer SOT

Introduction SOT-Group

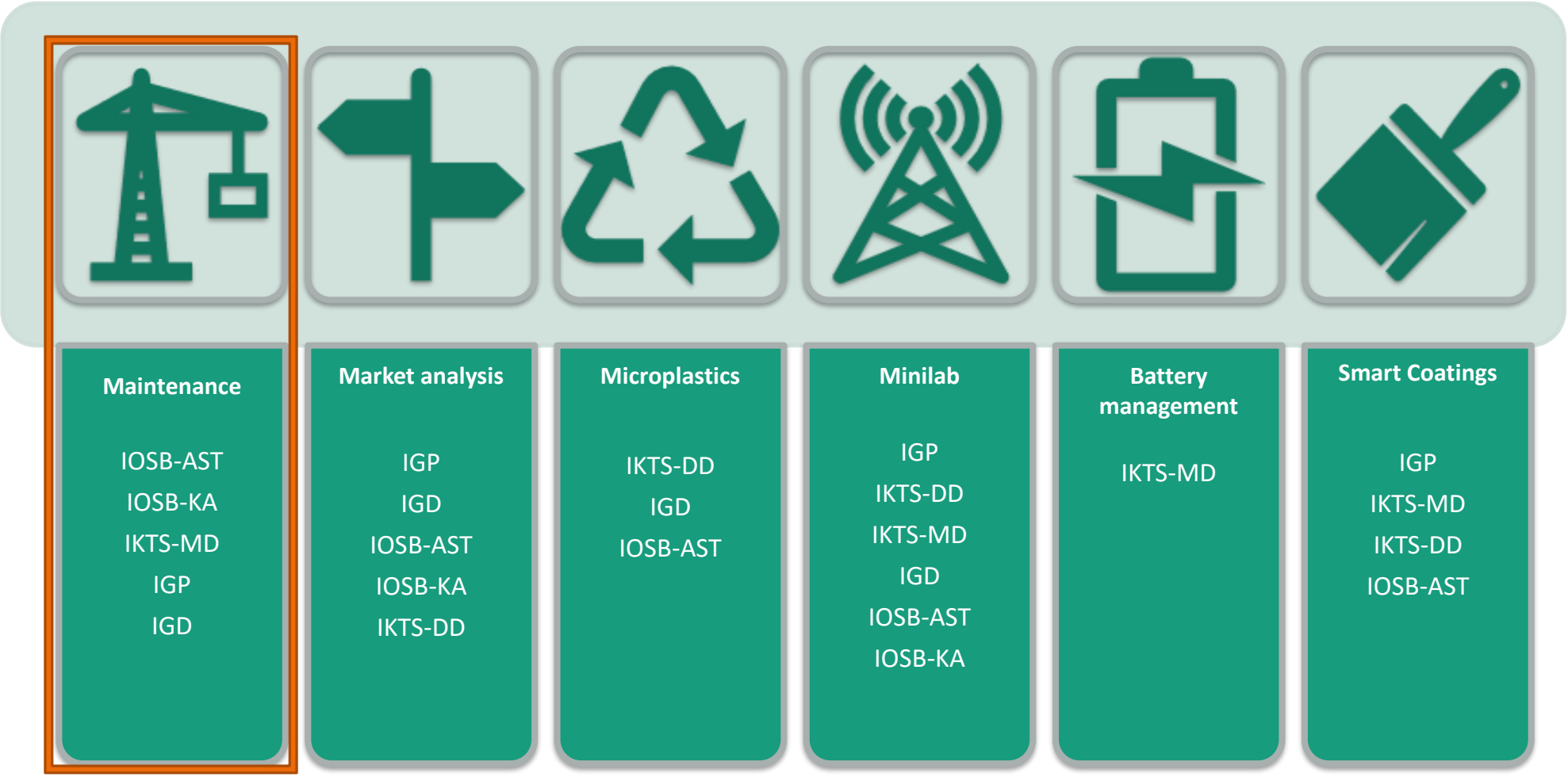

Fraunhofer SOT

Start-Project Offshore Maintenance

Fields of Innovation

- Vehicle Specification
- Coating Application
- Crack Detection
- Position Tracking
- 3D-Imaging

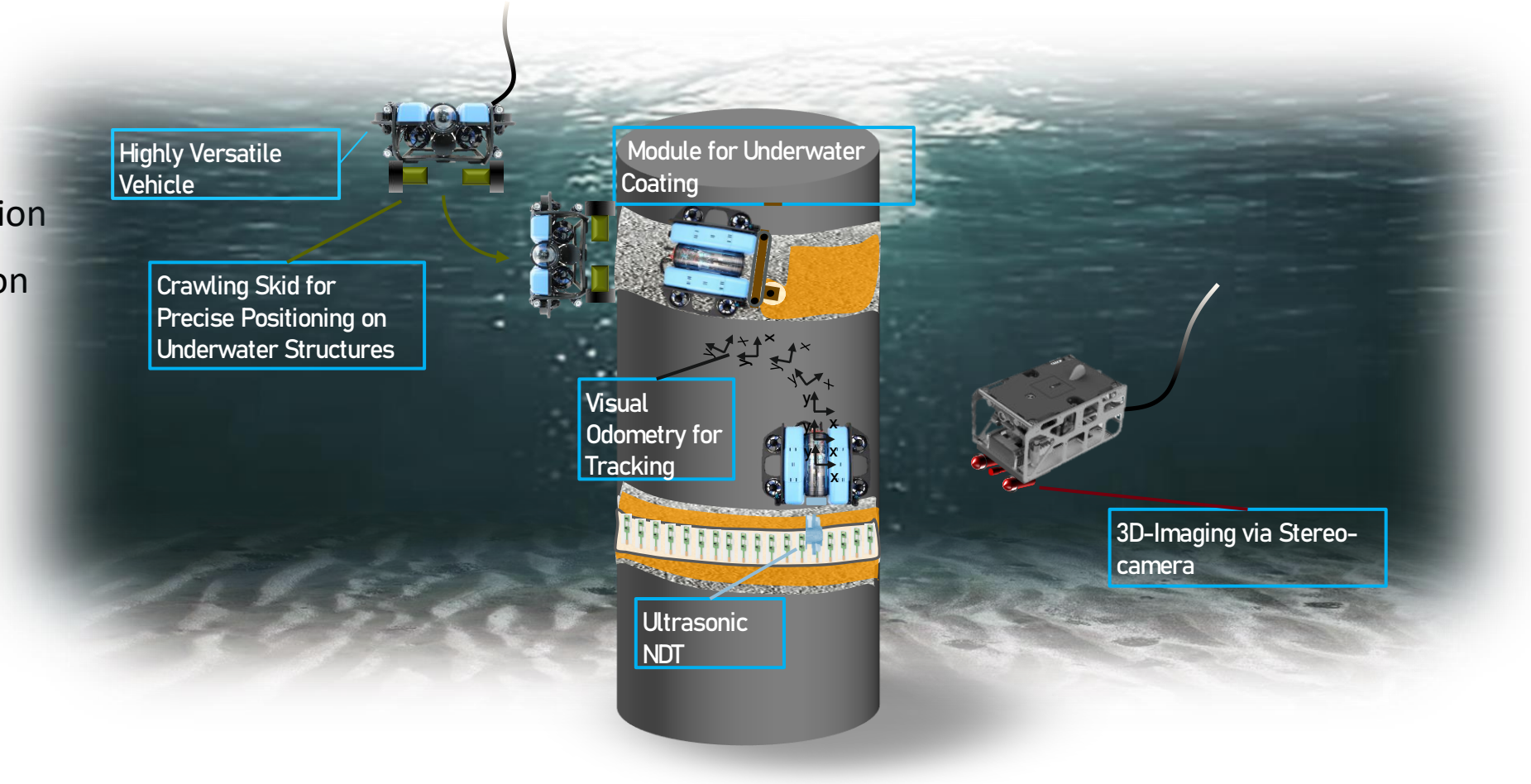

Fraunhofer SOT

Vehicle Specification

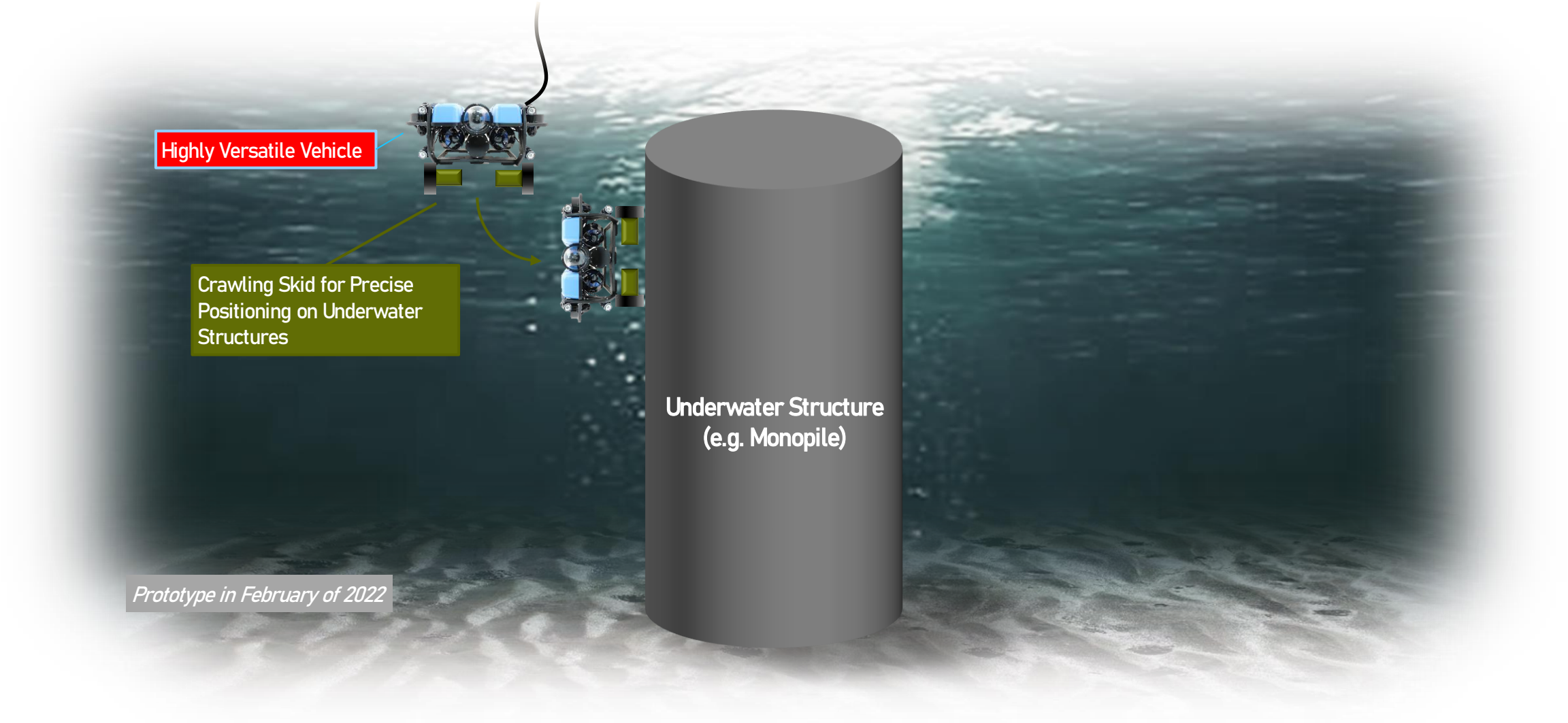

Fraunhofer SOT

Vehicle Specification

BlueROV2 for maneuverability in 6 degrees of freedom

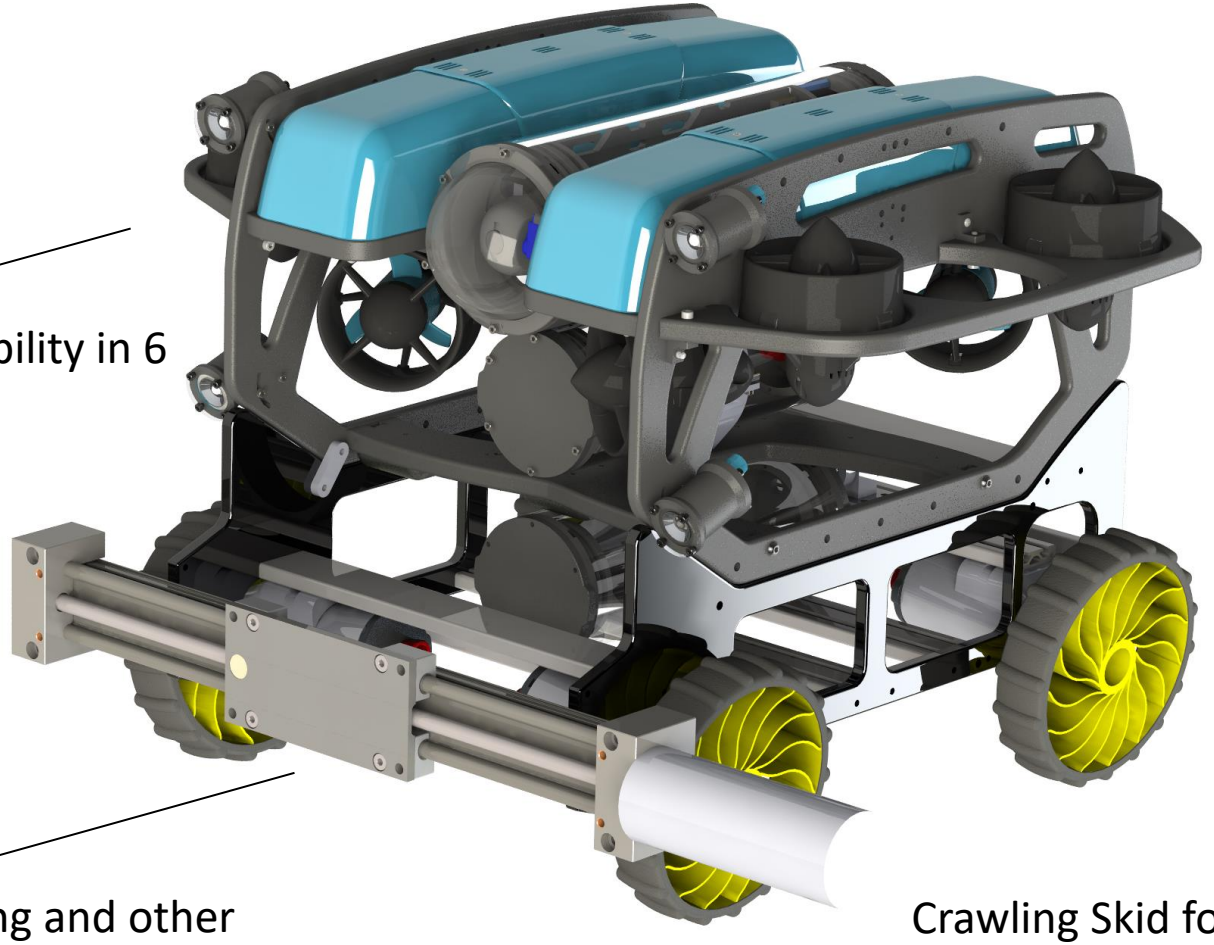

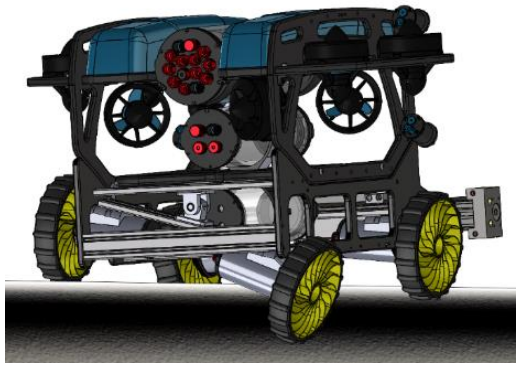

Pivoted axle for curved surfaces

Linear Actuator for Painting and other Underwater Intervention Tasks

Crawling Skid for Accurate Positioning and Movement on Surfaces

Fraunhofer SOT

Coating Application

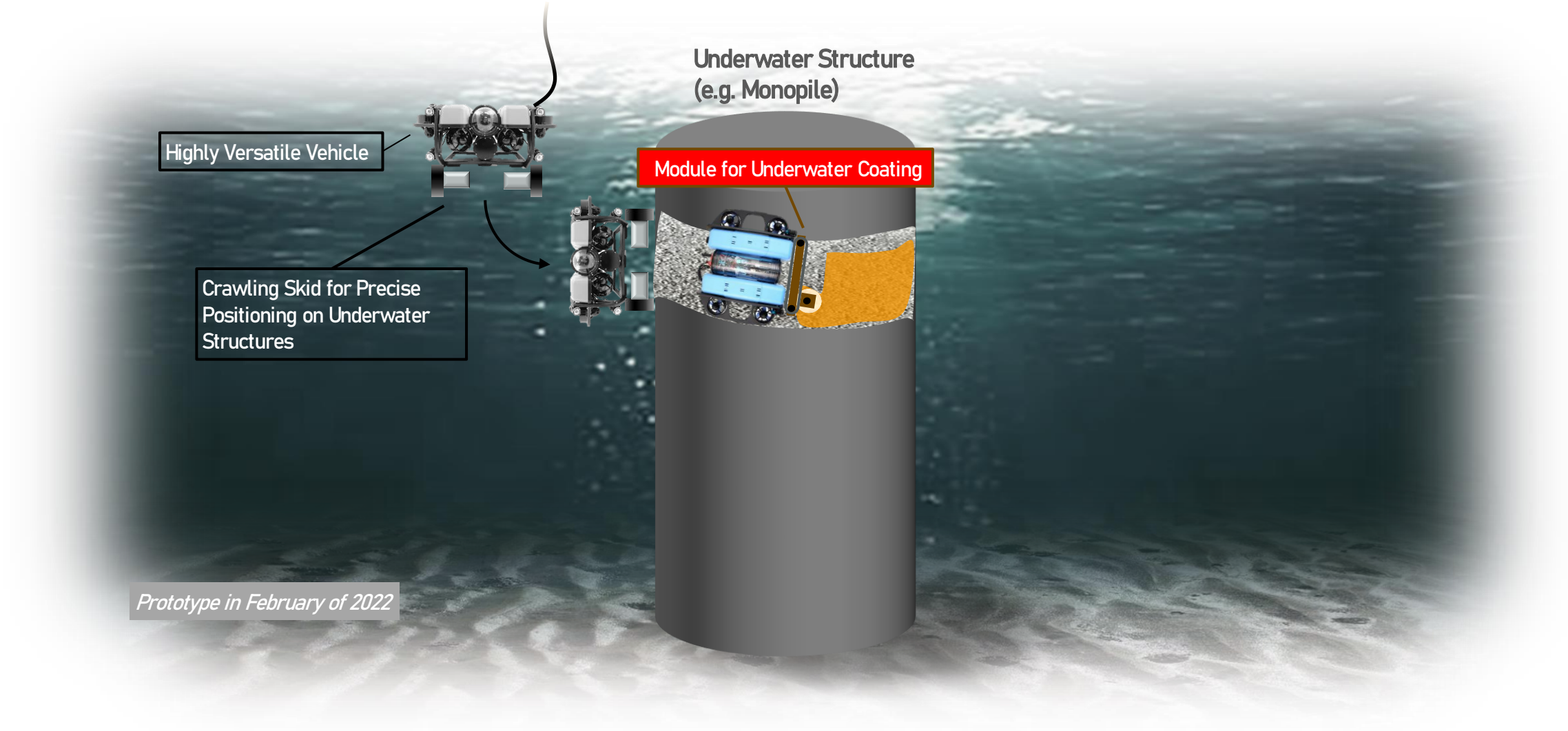

Coating Application

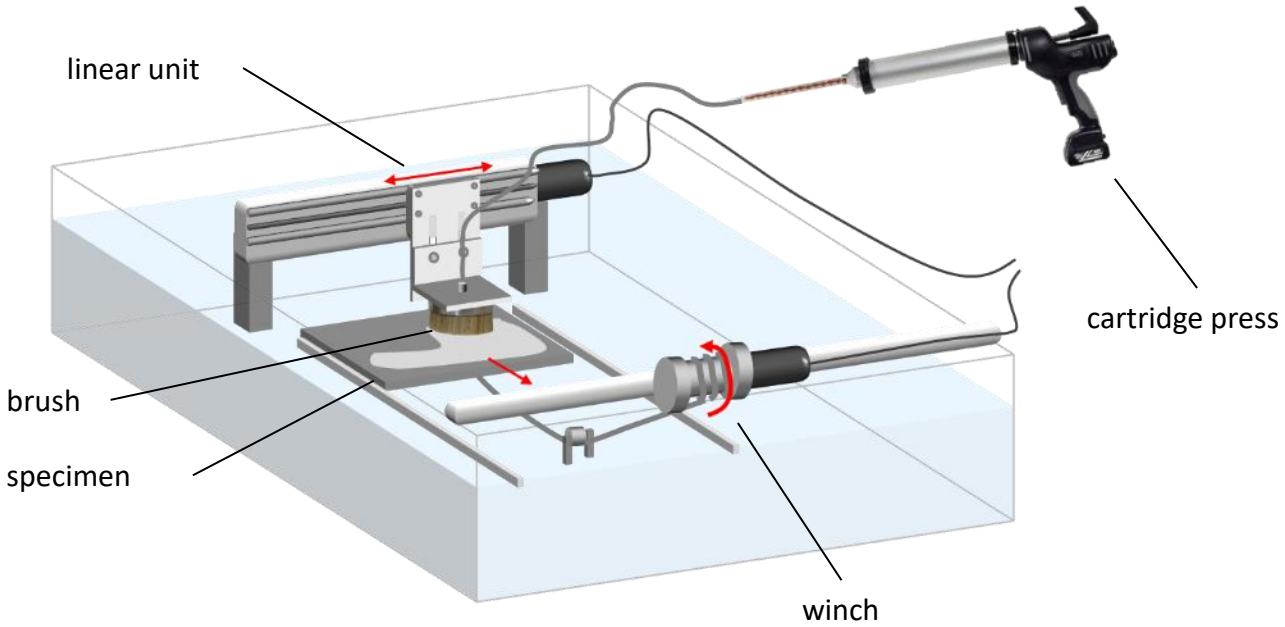

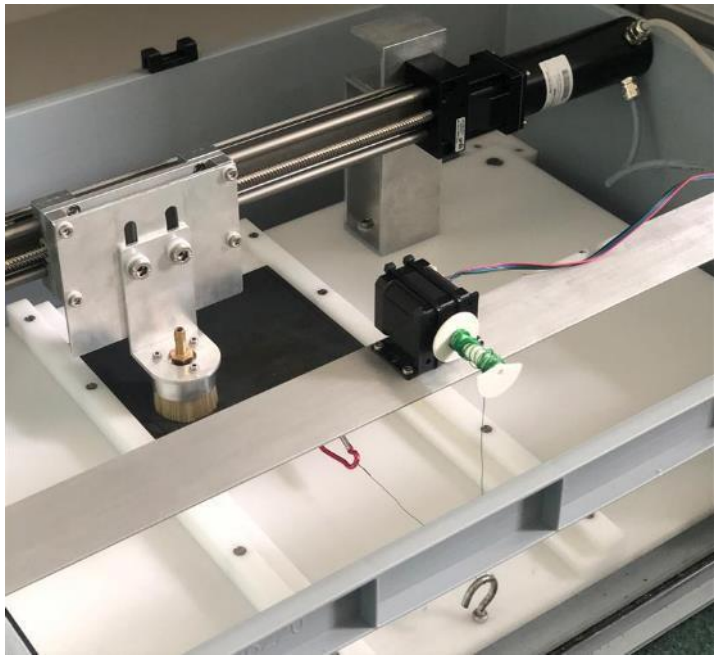

Design of Experiments:

Determination of Parameters

-velocity in x-direction	→ linear unit
-velocity in y-direction	→ ROV
-velocity of injection	→ cartridge press

Evaluation of the tests

- adhesive tensile strength
- layer thickness
- artificial aging
- …

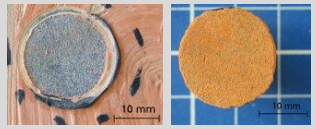

Target:

Process parameters for underwater coating application on offshore structures

Fraunhofer SOT

Coating Application

Problem

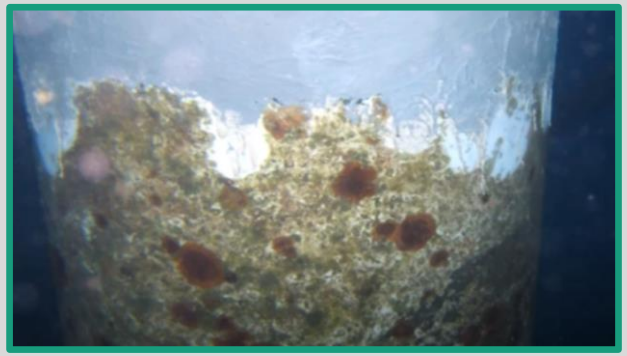

Coating damage on offshore structure

Process investigation

Manual laboratory tests

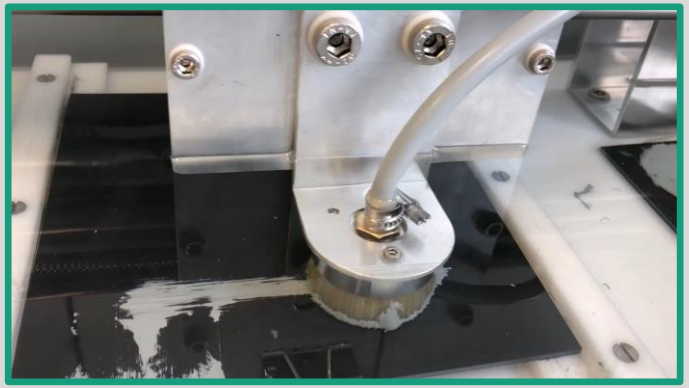

Mechanized laboratory tests

Offshore maintenance

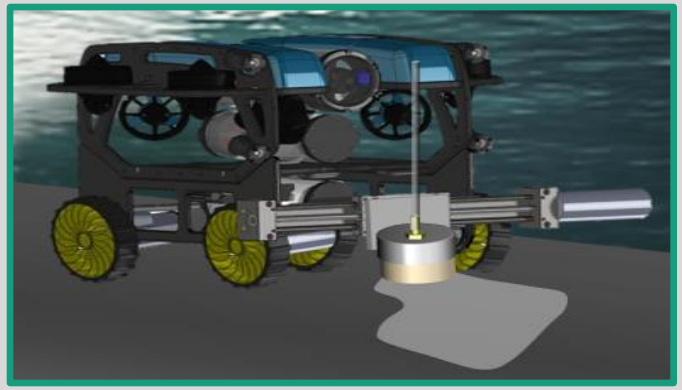

Underwater coating application via ROV

Fraunhofer SOT

Crack Detection

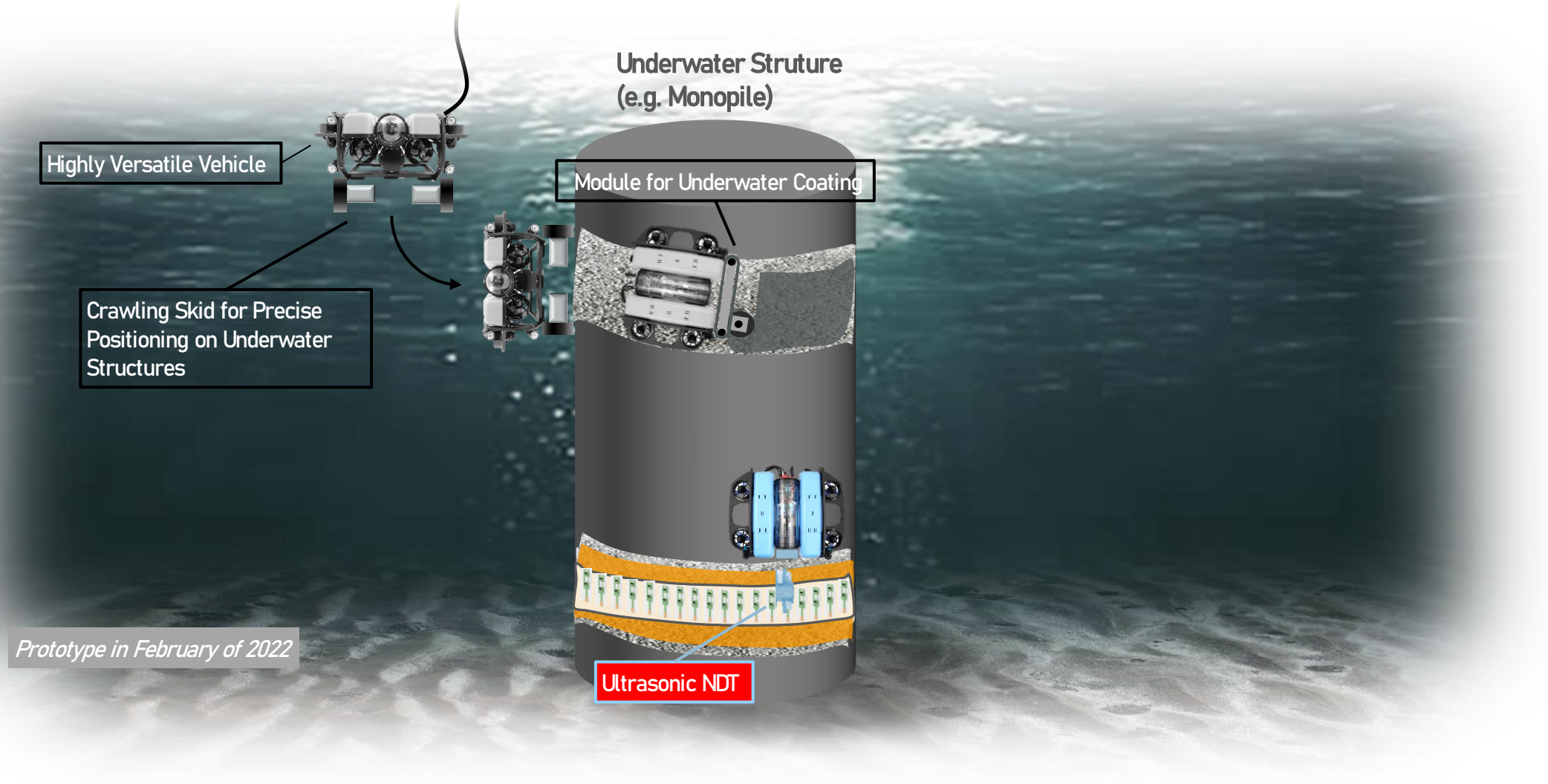

Crack Detection

- Piezo-electric shear wave transducer
- Addition to visual checks
- Energy and data transfer via ROV
- Artificial crack with dimensions 70x5x2mm^3 representing broken weld seam

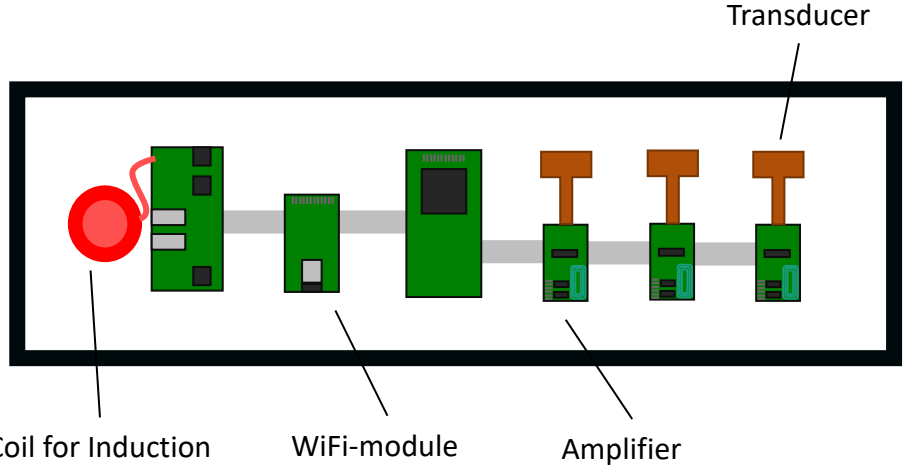

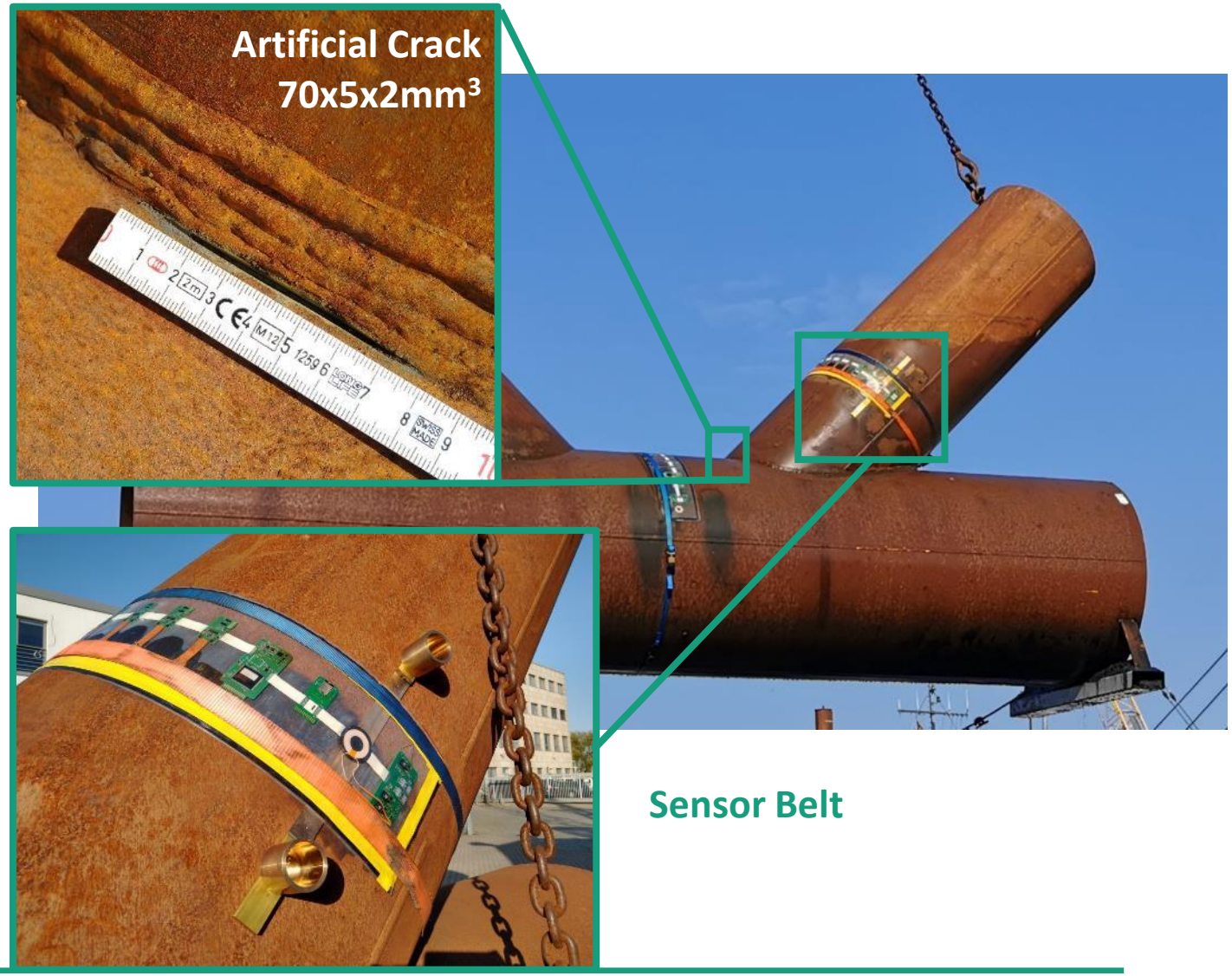

Fraunhofer SOT

Crack Detection

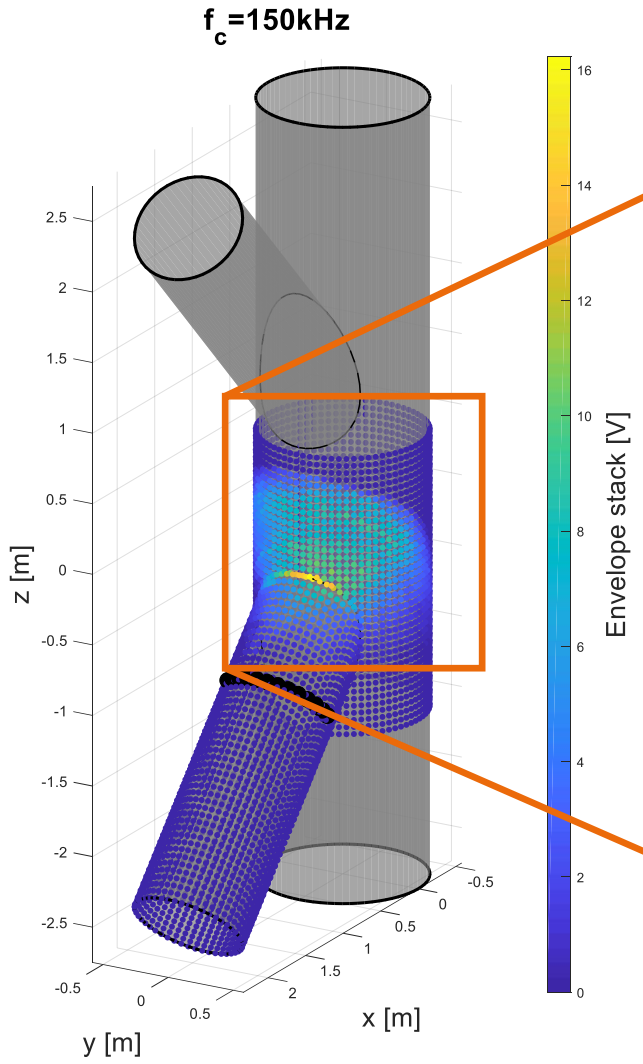

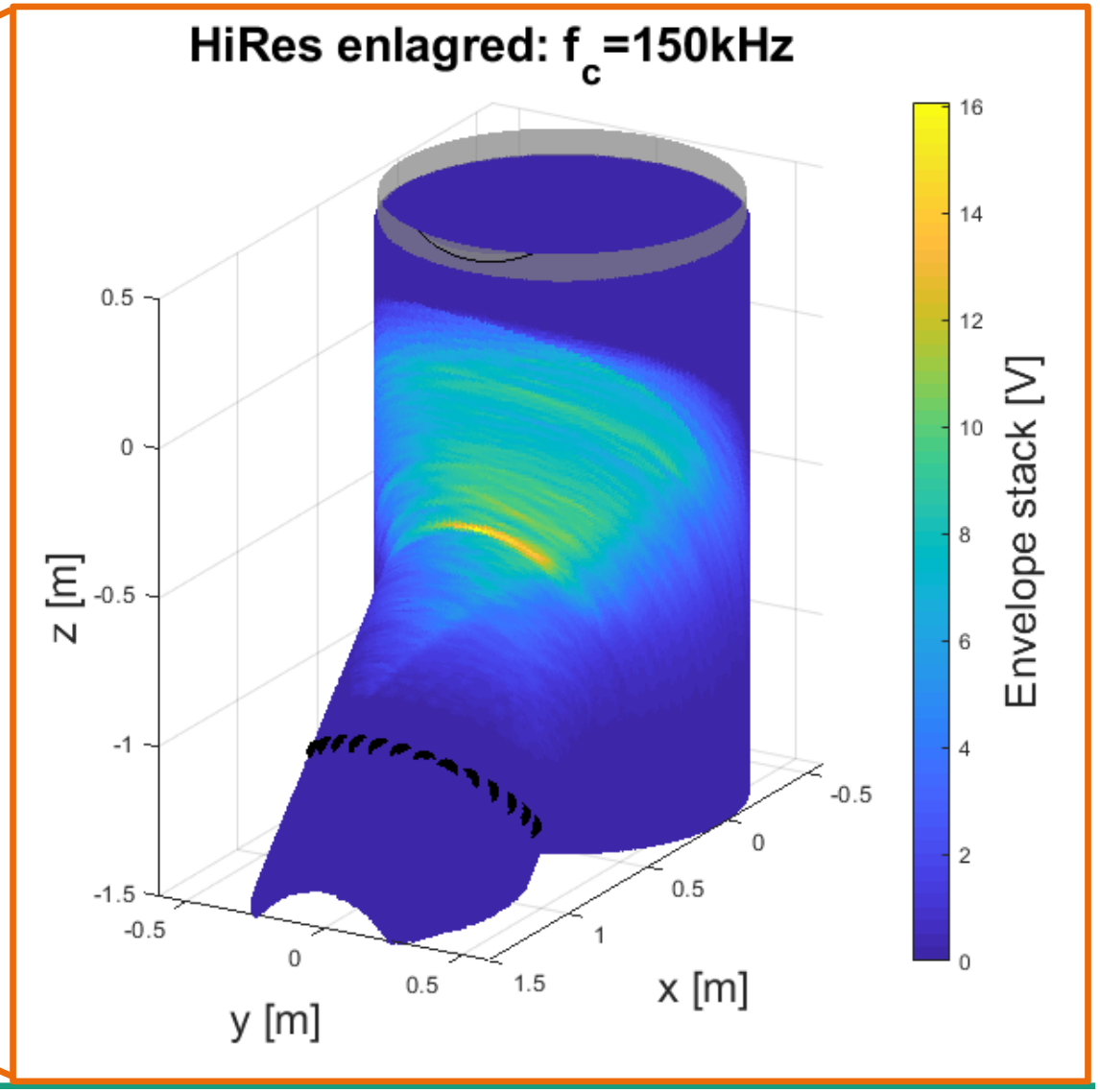

Fraunhofer SOT

Position tracking

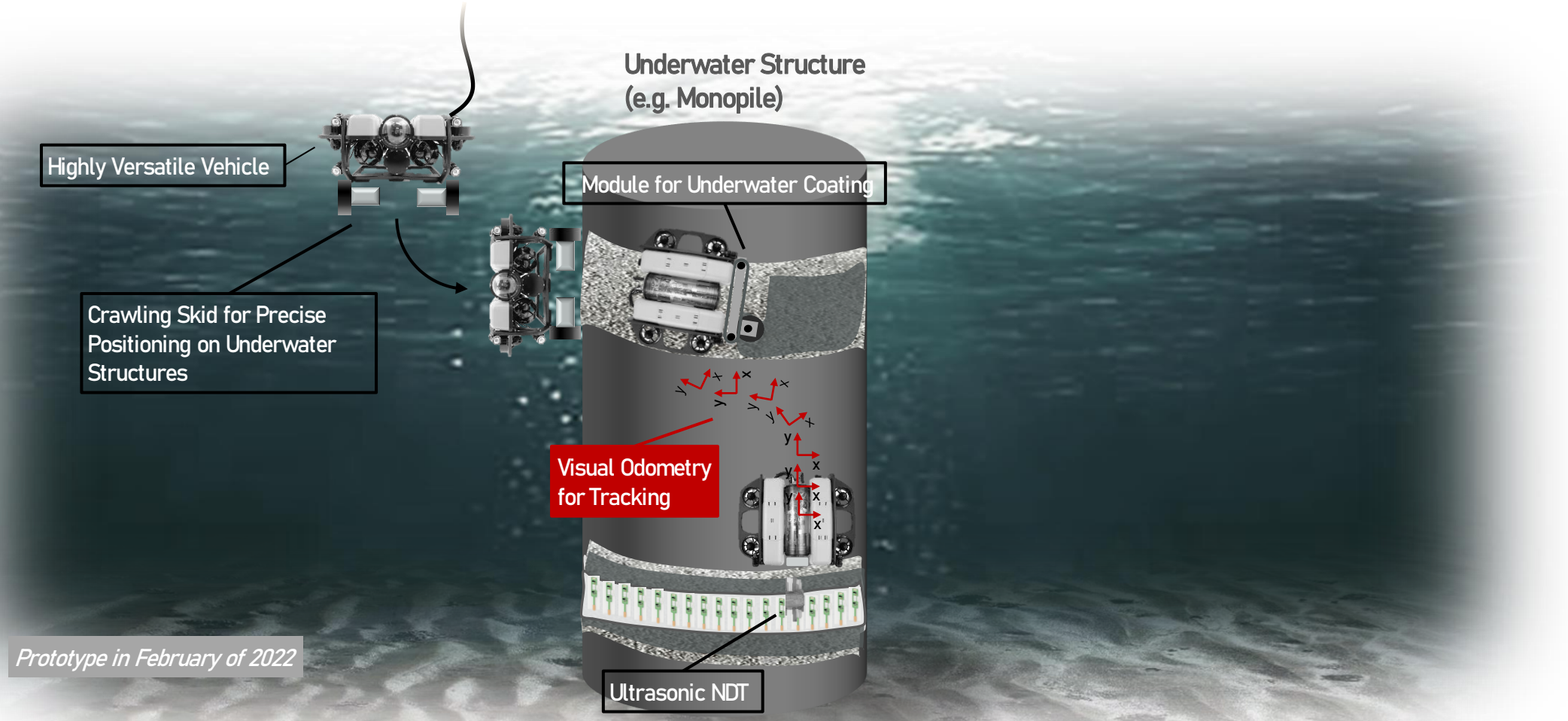

Prototype in February of 2022

3D-Imaging

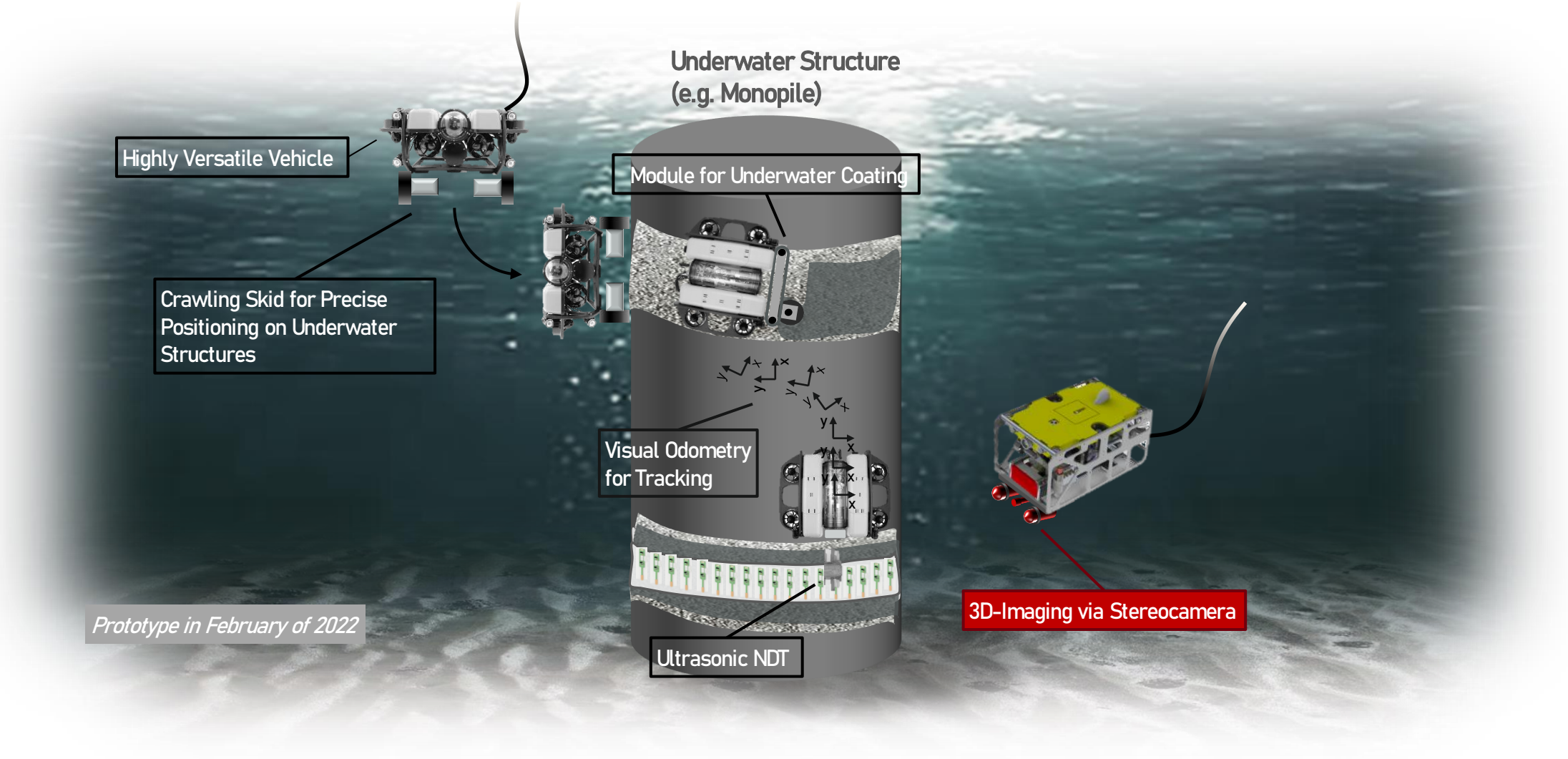
Underwater Structure
(e.g. Monopile)
Highly Versatile Vehicle
Module for Underwater Coating
Crawling Skid for Precise Positioning on Underwater Structures
Visual Odometry for Tracking
Ultrasonic NDT
3D-Imaging via Stereocamera
Prototype in February of 2022

Summary

- Objectives
  - Automated non-destructive testing of underwater foundations
  - Automated coating of underwater foundations with corrosion protection
  - Development of a carrier vehicle for precise underwater manipulation and navigation
- Innovations
  - Capability of NDT with the help of guided acoustic waves in the kHz range
  - Manipulation of underwater structures without diver - demonstrated with a coating application
  - More precise models for model-based image enhancement (backscattering, etc.)
- Results so far
  - Coating concept, preliminary tests, start of applicator construction
  - Vehicle concept, preliminary tests, construction in progress, start of procurement
  - Prototype for reading out the NDT sensors, start of long-term test
- Companies involved in the project-accompanying committee (PBA)
  - Wencon (Denmark), Pihl Expert GmbH, Hamburg Port Authority (requested)
- Duration of the project: 01.03.2020 – 28.02.2022 (milestone prototype)

3. SOT - Range of Services

- Industrial application research respectively contract research
- Prototype development and testing in laboratory and field tests
- Provision of test and commissioning infrastructure
- Testing or certification of technologies or products
- User education and training

Thank you for your attention !

Contact us:

Fraunhofer Smart Ocean Technologies - SOT

Alter Hafen Süd 6

18069 Rostock

info@sot.fraunhofer.de

www.smart-ocean.fraunhofer.de

Fraunhofer SOT